ShanPu

Rotary encoder with LCD Switches SLB2

General Description

Display	
Size	: 1.28inch Circle TFT
Driver IC	: GC9A01
Interface Type	: SPI (Serial Perpheral Interface)
Power Supply	: 3.3V
Resolution	: 240RGB(H) x 240(V)
Display Color	: Full Color, 262K(max.)
Luminance(cd/m2)	: 400(cd/m2)
Backlight Type	: White LED
Encoder	
Transmissive Optical Sensor	
Power Supply	: 3.3V
Output Signal	: HIGH & LOW
Resolution	: 36 step per revolution
Operating Life	: C.W. 100,000 cycles min. & C.C.W 100,000 cycles min.
Operating Force	: 1.5Kgf-cm (Max.)
Switch	
Resolution	: 0.5±0.3mm
Operating Life	: 100,000 cycles min.
Operating Force	: 800gf±300gf
Operation Temperature	: -20°C~ 70°C
IP Code	: IP65
Materials	
Knob	:Polyamide(PA),Polycarbonate (PC) , Aluminum
Lens	:Polycarbonate (PC)
Base	:Polycarbonate (PC)
Washer	:NBR
Nuts	:Polyamide(PA)

/ Installation Notes

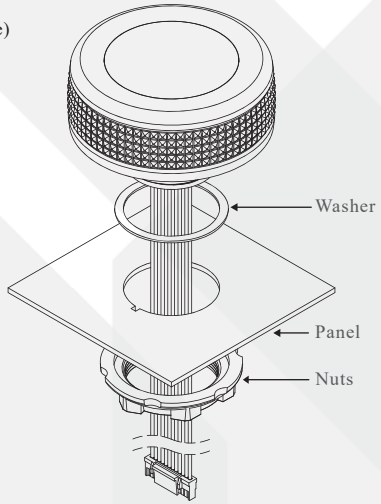

PAT. I688980
PAT. I738469
PAT. D199473
PAT. ZL201822200452.0
PAT. ZL201830757963.5

Block Diagram

/ Pin function

Pin	Name	Function
1	LED A	LCD Backlight VCC
2	SW N.O.	Switch N.O.
3	VCC2	Rotary Encode Optical Sensor Power
4	A1	Rotary Encode Signal, Output
5	A2	Rotary Encode Signal, Output
6	MOSI	LCD Data Signal, Input
7	SCLK	LCD Clock Signal, Input
8	RS	LCD Register Select Signal
9	CS	LCD Chip Select Signal, Input
10	RESET	LCD Reset Signal, Input
11	GND	Ground
		Switch COM.
12	VCC1	LCD Power

/ Rotation

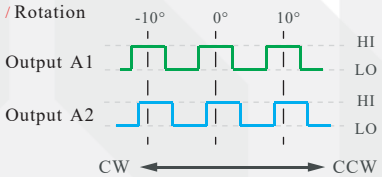

Numbers of detent : 36

Pulse / Rotation : 36 pulse / 360°

/ Panel cutting

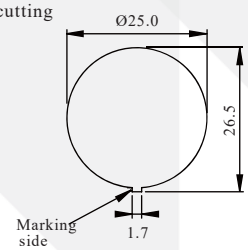

Panel thickness 1.5~4mm

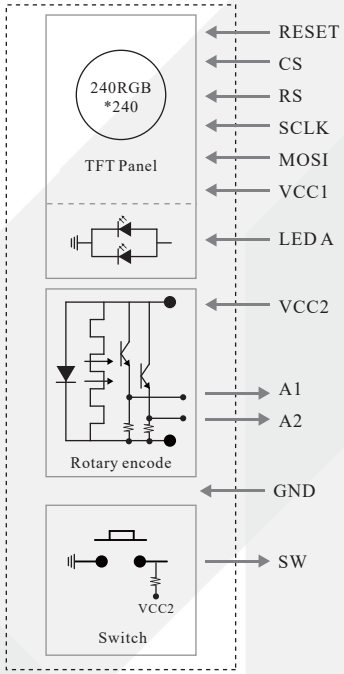

The connector on the SLB2 module is similar JST GHR-12V-S
Applicable Connector:
Conductor pitch / 1.25mm
Conductor width /□0.2mm

ShanPu

Rotary encoder with LCD Switches SLB2

Dimension

/ Knob type : P

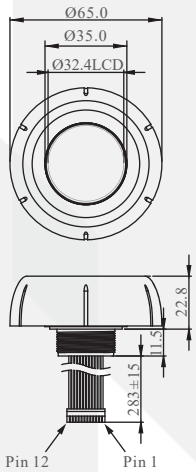

/ Knob type : 1

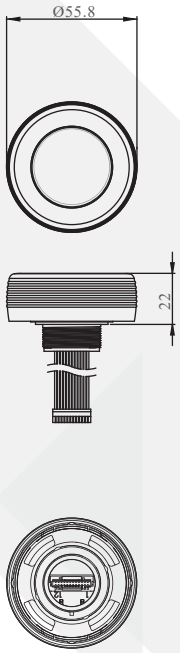

/ Knob type : 2

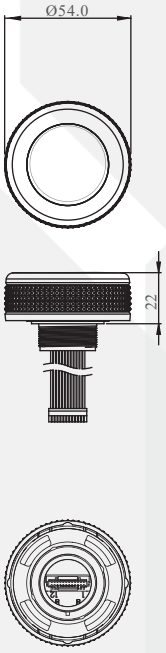

/ Knob type : 3

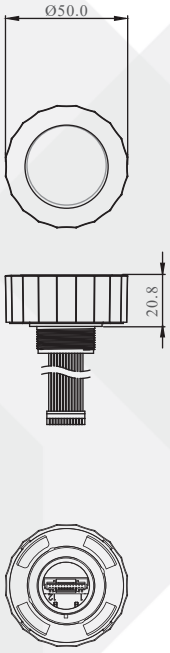

Option

/ Development Kit P/N : K-SLB2-01

The SLB2 demo program develop by ESP32 system. ESP32 is an open-source electronic platform based on easy-to-use hardware and software. Use Arduion-ESP32 IDE, so user can very easy to use SLB2 through SLB2 development kit from ESP32.
Dimension(Without cable):85mm(W)*50mm(D)*18.5mm(H)

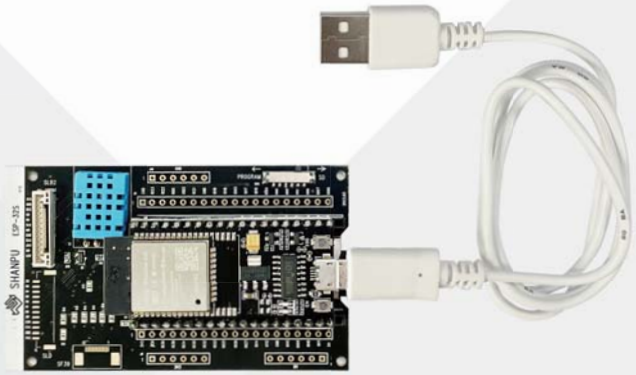

/ Cable P/N : K-SLB-03

The SLB2 series connect to Raspberry Pi. though cable wire

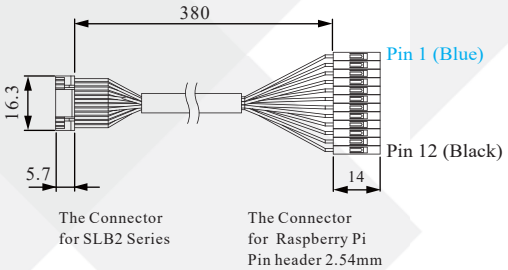

ShanPu

Rotary encoder with LCD Switches SLB2

How to order

SLB2-PL | Knob type P / Silver / Plastic

SLB2-10 | Knob type 1 / Silver / Aluminum

SLB2-2L | Knob type 2 / Silver / Plastic

SLB2-3T | Knob type 3 / Transparent / Plastic

SLB2-P5 | Knob type P / Black / Plastic

SLB2-15 | Knob type 1 / Black / Aluminum

SLB2-25 | Knob type 2 / Black / Plastic